Digital AVR Clock Processor&Supply Unit
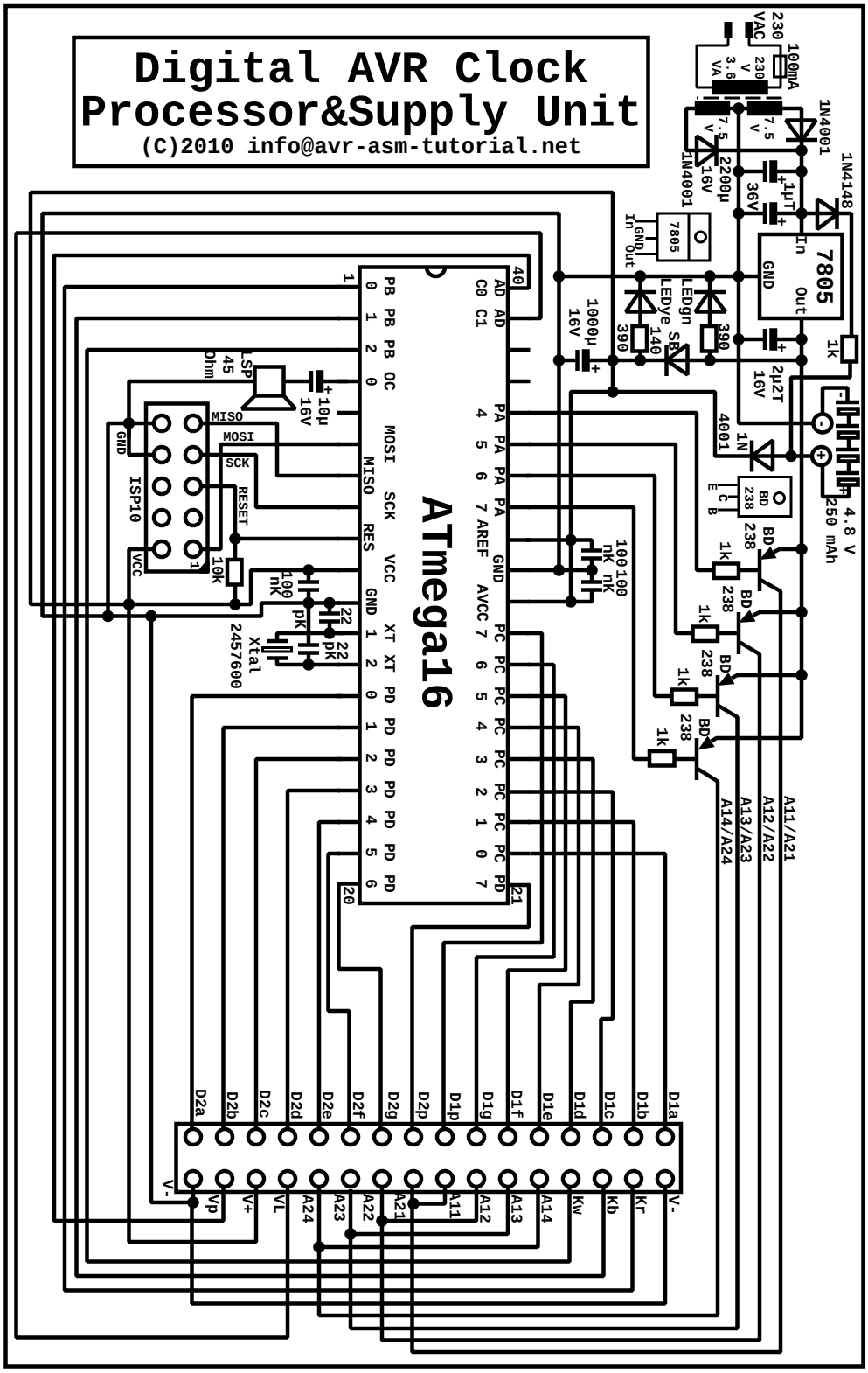
(C)2010 info@avr-asm-tutorial.net