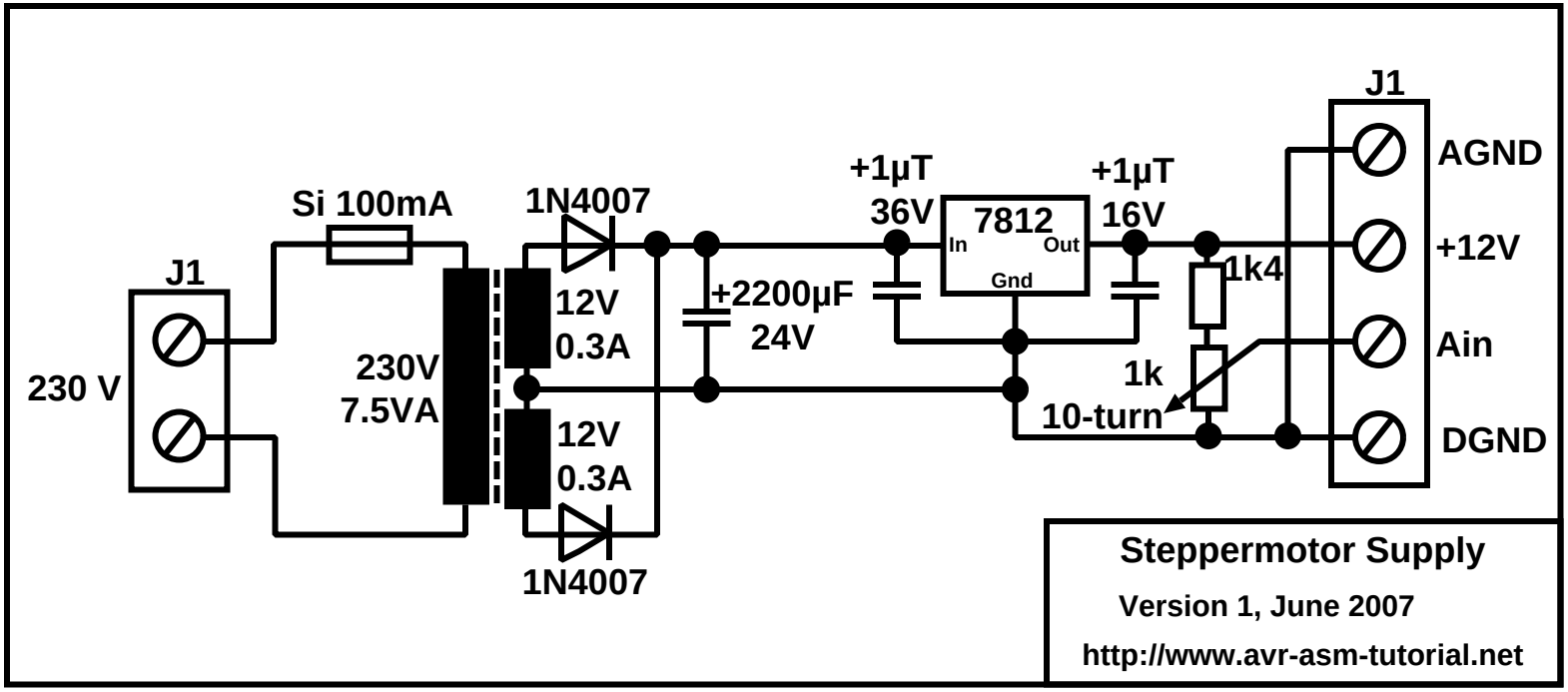
J1
230 V
Si 100mA
230V
7.5VA
1N4007
12V
0.3A
12V
0.3A
1N4007
+2200µF
24V
+1µT
36V
7812
In
Out
Gnd
+1µT
16V
1k4
1k
10-turn
J1
AGND
+12V
Ain
DGND
Steppermotor Supply
Version 1, June 2007
http://www.avr-asm-tutorial.net